# AC Energy Meter

## DATA SHEET

## Hardware Specifications

| Specification | Measurements |
|---|---|
| AC Current Measurement | Average, AR, AY, AB |
| AC Voltage Measurement | Average VLL (RY, YB, BR), VLN (RN, YN, BN) |
| Power Factor | Average and Phase Wise |
| Active Power (kW) | Total and Phase Wise |
| Apparent Power (kVA) | Total and Phase Wise |
| Frequency (Hz) | 45 to 65 Hz |
| Active Energy(kWh) | Both EB and DG |
| Isolation (RS485) | 2000 VAC Isolation for 1 min between communication and other circuits |
| Power Input | 48 VDC |
| Operating Temperature | -10°C to 55°C |
| Storage temperature | -25°C to 70°C |
| Humidity | 5% to 95% non condensing |

## Ordering Information

| | |
|---|---|
| Item Code | INV-METER-0067 |


Copyright@2026InvendisTechnologies

# CONNECTION DIAGRAM

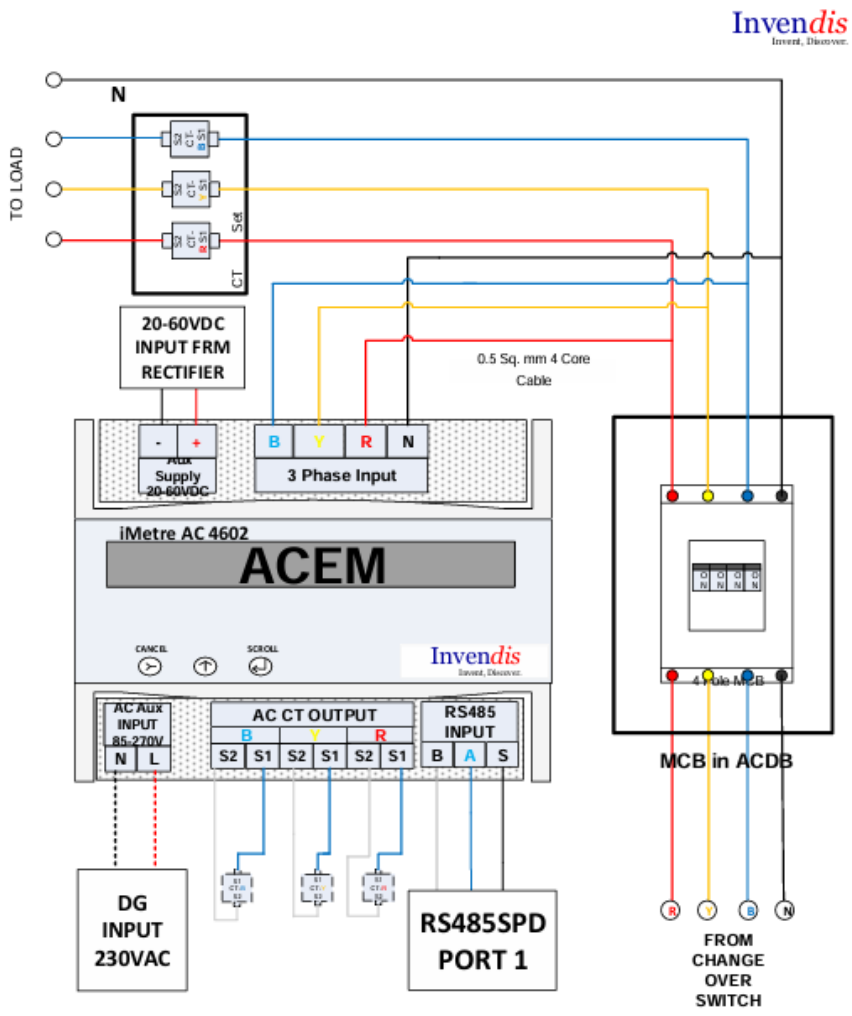


ACEM wiring Connections

All rights reserved, subject to change without prior notice

Get in touch:

sales@invendis.com

www.invendis.com

Invendis Technologies India Private Limited
No. 230, 1st Cross, 38th Main, BOOHBCS Layout, BTM
2nd Stage, Bangalore – 560 068